INSTALLATION INSTRUCTIONS

INSTALLATION STEPS

Please note that the connecting way of E - F

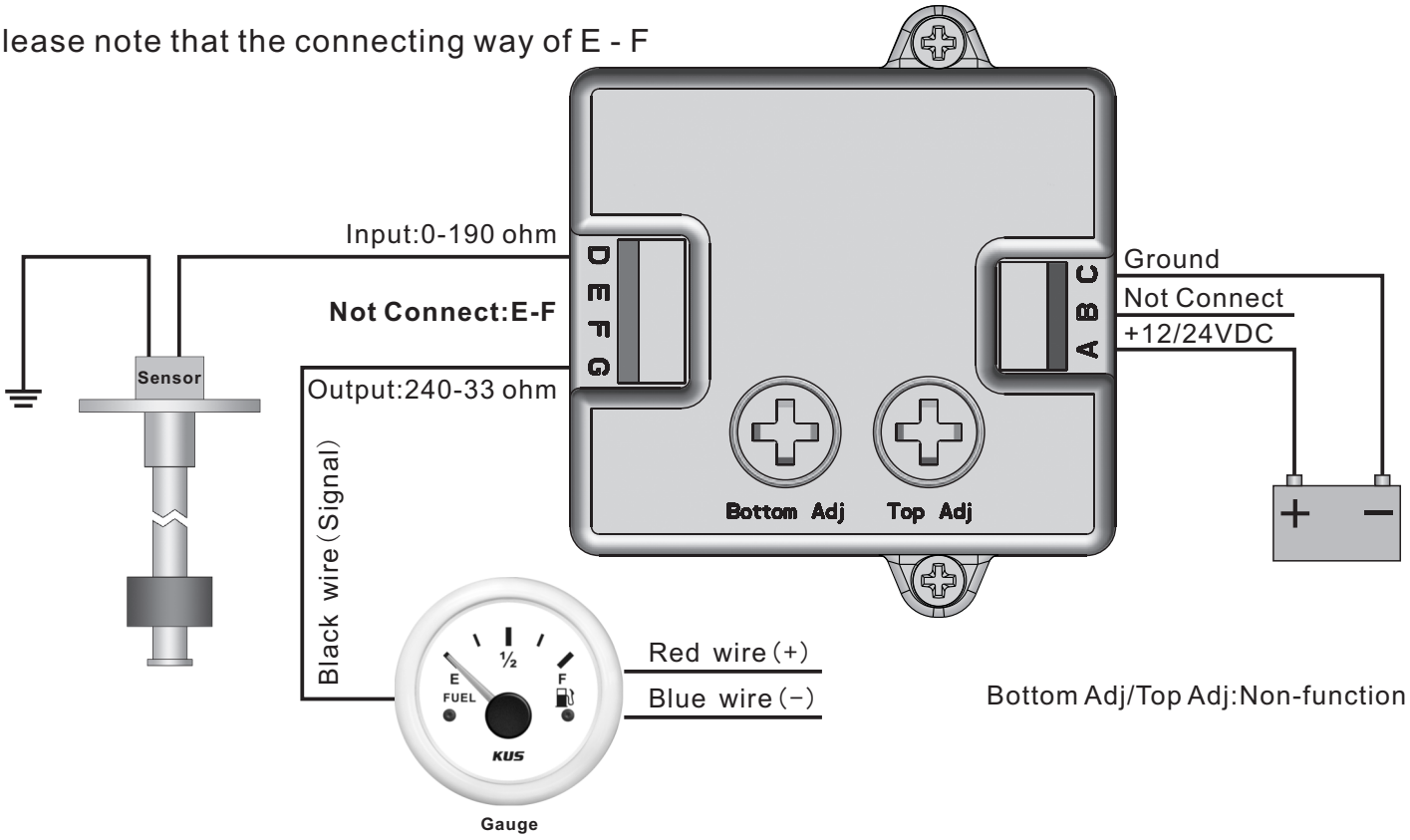

Input:0-190 ohm —conversion→ Output:240-33 ohm

Please note that the connecting way of E - F

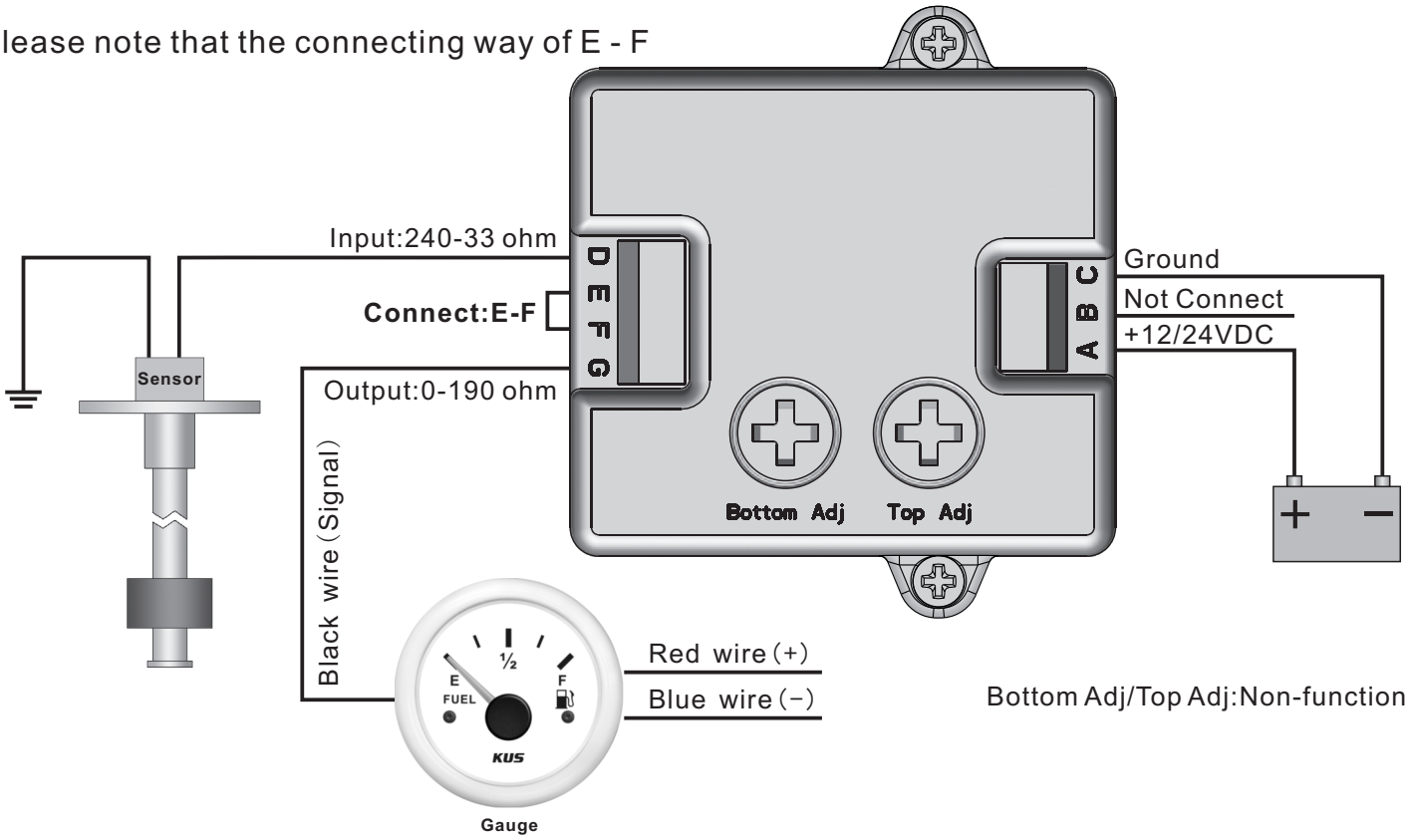

Input:240-33 ohm —conversion→ Output:0-190 ohm